THE PRESIDENT'S OFFICE
REGIONAL ADMINISTRATION AND LOCAL GOVERNMENT
TEMEKE MUNICIPAL COUNCIL
DOVYA SECONDARY SCHOOL
FORM THREE MIDTERM EXAMINATION
PHYSICS

3 HOURS **AUGUST 27, 2026**

INSTRUCTIONS

A. This paper consists sections A, B and C with the total of ten (10) questions
B. Answer all questions
C. Section A carries Sixteen (16) marks, section B fifty-four (54) marks and section C Carries thirty (30) marks.
D. non-programmable calculator may be used.
E. Be neat and precise

Where necessary the following constants may be used:
i. Density of water = 1000 kg/m^3 or 1 g/cm^3.
ii. Acceleration due to gravity, g = 10N/kg.
iii. Density of mercury =$13.6gcm^{-3}$
iv. Density of sea water = $1100kg/m^3$
v. Density of water=1.0g/cm³ or 1000kg/m³
vi. Linear expansivity of brass=19×10–⁶/K Linear expansivity of iron=12×10–⁶/K

SECTION A. (16 MARKS)
Answer all Questions from this section

1. For each of the items (i) - (x), choose the correct answer among the given alternatives and write its letter besides the item number in your answer.

i. A uniform beam XY is pivoted at one end X, and a vertically upward force of 4N at Y keeps the beam horizontal. The weight of the beam in Newton's is? A. 8. B. 6 C. 4 D. 2 E. 1

ii. A force F Newton's gives a mass of 2 kg an acceleration of $4m/s^2$.A force of 3F Newton's will give a mass of 8kg an acceleration in $m/s^2$of ? A. 1 B. 3. C. 6 D. 12 E. 24

iii. In a single rope 4-pulley system, the mechanical advantage is less than 4. Because A. The effort may vary B. The upper pulley does not move C. Friction act on a pulleys D. The weight of the lower pulley can E. The road is raised. be neglected

iv. A physics teacher asked the students to explain briefly things which may cause fire in the physics laboratory. The students tried to answer but some explanations were not correct. Identify the explanations which were not correct A. Electric faults. B. Presence of flammable materials. C. Carelessness in using gas lighter and match boxes. D. The colour of some chemicals supports combustion. E. Presence of corrosive materials

v. A measuring cylinder is filled with oil. A girl says that the pressure at the bottom of the cylinder depends on? 1. The height of the oil.2. The area at the bottom. 3. The oil lubrication property.4. The oil density. Which one of A, B, C, D and E is correct? A. 1 and 3 B. 2 and 4 C. 1and 4 D. 3 and 4 E. 1 and 2

vi. A car moving at steady speed has a frictional force on its surface whose size depends on? A. Its speed and surface area B. Its speed only C. Its area only D. Its wheel speed only E. Its weight

vii. Cooking oil was mixed with water and poured into a measuring cylinder and allowed to settle for three minutes, which one will be the observed phenomenon? A. Meniscus of water appeared convex in shape at the surface. B. Cooking oil floats over water. C. Water floats over the oil. D. Water and oil completely mixed up. D. Cooking oil are soluble in water

viii. The following is a reason why objects in air tend to fall at the same time when they are released from the same height h above the ground level.
A. They have the same weight. B. There is usually no resistance in the air. C. Acceleration due to gravity

Shulelibrary.com

is the same. D. Gravity does not affect E. None of the above.

ix. A house building contractor fitted window glass panes which someone cannot see through, but the rooms are fully illuminated with light. These types of glass pane materials are said to be: A. dim B. opaque C. transparent D. Translucent E. black material

x. Apparent weight is equal to A. Up thrust B. Weight of liquid displaced C. Apparent loss in weight D. Weight of body when in liquid

2. Match the terminologies used in curved mirrors in LIST A, with its correct meaning in LIST B, by writing the letter of correct response beside the item number in your sheet

LIST A	LIST B
i. Concave mirror	A. Centre of the sphere forming curved mirror.
ii. Pole	B. The point through which all ray parallel to the principal axis converges or appears to diverge after reflection through the mirror.
iii. Centre of curvature	C. Centre of an arc forming the sphere whose mirror is a part.
iv. Principal focus	D. The distance between the pole and Centre of curvature.
v. Focal length	E. Point through which all rays parallel to the principal axis converges or appears to diverge after refraction through the lens.
vi. Diverging mirror	F. The distance between the pole and principal focus of curved mirror
	G. Mirror whose reflecting surface curves outward (polished inside)
	H. Point through which refraction takes place
	I. Mirror whose reflecting surface curves inside (polished outside)

SECTION B. (54 MARKS)

Answer all Questions from this section

3. (a) Explain why

(i) Hot soup is testier than cold soup?

(ii) Mosquitoes can manage to walk on the surface of water?

b) Suppose your are assigned to design a thermos flask. Explain how you will minimize heat loss by conduction, convection and radiation.

c) A man whose mass is 80kg walks up a flight of 25steps each 20cm high in 10seconds. Find the power developed by the man in kilowatt.

4. (a) (i) When the school bus started moving, some of the students fell back. Explain the meaning of this phenomenon.

(ii) A man climbing uphill tends to bend forward while a man descending downhill tends to bend backward. Briefly explain.

b) A car starts from rest and accelerates to a velocity of 10m/s in one minute. It maintains this speed for 40s and finally decelerates uniformly to come to rest after 30 seconds.

(i) Draw a velocity time graph for this motion

Shulelibrary.com

5. Calculate the total distance covered by the car from your graph.(a) The velocity of car A relative to car B is 5m/s when the two cars are moving in the same direction and 15m/s when the two cars are moving in the opposite directions. Determine the velocity of each car.

(b) It is found that a uniform wooden lath 100cm long and mass 95g balances on a knife edge when a 5g mass is hung10cm from one end. How far is the knife edge from the centre of the lath

c) The efficiency of a machine is always less than 100%, explain. (a)

(i) State the laws of refraction of light

(ii) Complete the table below by filling the empty spaces

Colours of light mixed	**Colour formed**
Red+Green+ Blue	.....
Yellow + Blue	.....
Yellow + Magenta + Cyan	.....
..... + Magenta	White light
Blue + Green	.....

b) (i)Explain why a concave mirror used as shaving mirror.?

(ii)An object 3cm High is placed at point 30cm from the pole of concave mirror whose focal length is 12cm.using mirror formula, find height and the nature of images formed.

6. a)(i)Define the term "linear expansivity"of a solid.

(ii) Explain why the iron-sheet roofs make cracking noise in cold night after a hot day?

(b) Explain how fish and other aquatic organisms are able to survive in frozen lake.

(c) The difference in length between brass and iron is 14cm at 10°c.what must be the length of iron for this difference to remain 14cm, when both rods are heated to 100°C.

7. (a) Explain briefly why ships float while a piece of iron sinks in water?

(b) A piece of cork of volume 100cm^3 is floating on water. If the density of cork is 0.35g/cm^3. Calculate the volume of cork immersed in water

c) The specific heat capacity of acetic acid is approximately half that of water. Suppose that equal mass of water at 20 ^{o}C and acetic acid at 100 ^{o}C are mixed in an insulated cup. What will the temperature of the mixture be at thermal equilibrium?

Shulelibrary.com

SECTION C (30 marks)

Answer all questions from this section

8. (a) Briefly explain three factors that determine the resistivity of the materials

(b) A fine wire has a resistance of 4Ω/m and area of 0.15m^2. When a coil made from this wire is connected to a 50V supply a current of 25mA flows.

(i) What is the length of wire making this coil?

(ii) Determine the resistivity of this wire.

(c) A potential difference of 24V from a battery is applied to the network of resistors as shown in the figure below

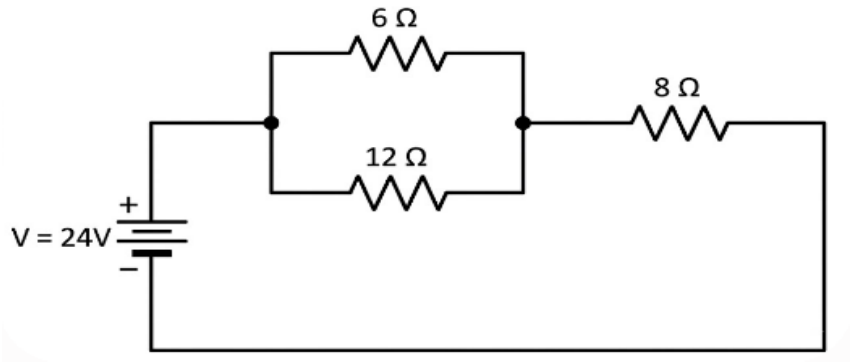

(i) What is the equivalent resistance in the figure above?
(ii) What is the potential difference across 6Ω resistor?
(iii) What is the current across 12Ω resistor

9. (a) (i) Why it is easy to roll a body than to slide it on the ground?
(ii)In which instance do you think friction is not useful? Give two reasons.

(b). A box is being pulled on a floor using a string. The string makes an angle of 30^0 with the box as shown in the figure below:

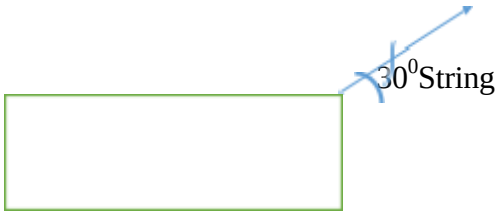

Box

If the force being applied at the string is 200N. Find:
(i) The force which tend to lift the box
(ii) The force which tends to pull the box forward

(c) An object of mass 1kg is initially placed on a frictionless plane inclined by an angle 30°. How long does it take the mass to move the distance of 10m down inclined?

Shulelibrary.com